COMPACT FLANGED BALL VALVE

KV-L7K · L7N

PN10–40 · one-piece body · raised face flanges

Compact one-piece flanged ball valve to DIN PN10/16/25/40 with a short face to face and a top mounting pad. Sizes DN15 to DN150, with fire safe versions KV-L7KF and KV-L7NF.

- One-piece body with raised face flanges
- Stainless steel 1.4408 / 1.4308 or carbon steel 1.0619
- TFM1600, PTFE or RTFE ball seats
- Anti-static stem · lock device on the lever
- Fire safe models KV-L7KF / KV-L7NF
- Lever DN15–80 · pipe handle DN100–150

SHORT FACE TO FACE

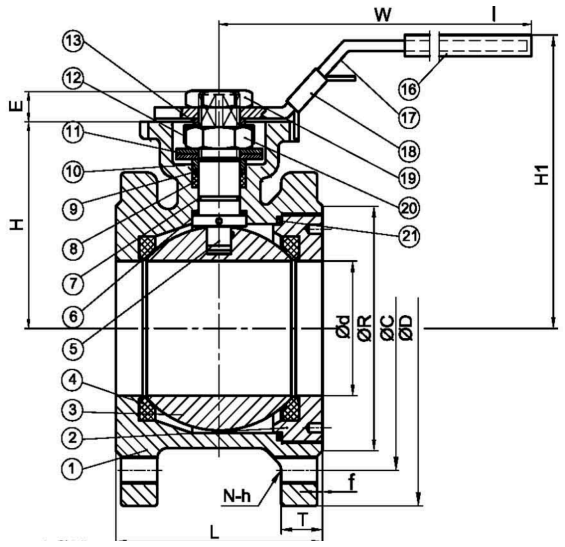

PN10–40 RF

PN10–40	DN15–150	42–225 mm	1-piece
DIN FLANGED RF	SIZE RANGE	FACE TO FACE L	BODY DESIGN

Options & materials.

DN15 – DN150 · PN10/16/25/40

Models

KV-L7K / L7N	Standard
KV-L7KF / L7NF	Fire safe
Fire safe: Grafoil packing and gasket	

Body materials

1.4408	Stainless steel
1.4308	Stainless steel
1.0619	Carbon steel

Trim & seals

Seat	TFM1600 / PTFE / RTFE
Stem	SUS 316 / SUS 304
O-ring	FKM (Viton)

Flange & body dimensions

MM · PN10/16 AND PN25/40

DN	NPS	Ød	ØR	ØC	ØD	f	T	L	N	h
15	½	15	45	65	95	2	9	42	4	M12
20	¾	20	58	75	105	2	9	44	4	M12
25	1	25	68	85	115	2	9	50	4	M12
32	1¼	32	78	100	140	2	12	60	4	M16
40	1½	38	88	110	150	3	13	65	4	M16
50	2	50	102	125	165	3	20	80	4	M16
65	2½	63.5	122	145	185	3	18 / 22	110 / 113	4 / 8	M16
80	3	76	138	160	200	3	20 / 24	120	8	M16
100	4	95	158 / 162	180 / 190	220 / 235	3	20 / 24	150 / 154	8	M16 / M20
125	5	118	188	210 / 220	250 / 270	3	22 / 26	180	8	M16 / M24
150	6	142	212 / 218	240 / 250	285 / 300	3	22 / 28	225	8	M20 / M24

Where two values are shown the first is PN10/16 and the second is PN25/40. DN15–50 share one flange drilling across PN10–40. Full table including top-works dimensions overleaf.

Material of construction.

No.	Part	Material
1	Body	1.4408 / 1.4308 / 1.0619
2	End cap	1.4408 / 1.4308 / 1.0619
3	Ball	1.4408 / 1.4308
4	Ball seat	TFM1600 / PTFE / RTFE
5	Stem (anti-static)	SUS 316 / SUS 304
6	Thrust washer	TFM1600 / PTFE / RTFE
7	O-ring	FKM (Viton)
8	V-ring packing	PTFE / Grafoil*
9	Bushing	50% SS + 50% PTFE / SUS 304*
10	Gland	SUS 316
11	Belleville washer	SUS 301
12	Stop-lock-cap	SUS 304
13	Handle gland	SUS 316
14	Stop bolt	A2-70
15	Stop nut	A2-70
16	Handle sleeve (DN15–80)	Vinyl plastic
17	Handle (DN15–80)	SUS 304
18	Lock device (DN15–80)	SUS 304
19	Handle nut (DN15–80)	A2-70
20	Stem nut	A2-70
21	Body gasket	PTFE / 316SS + Grafoil*
22	Handle adapter (DN100–150)	A351-CF8
23	Set screw (DN100–150)	A2-70
24	Pipe handle (DN100–150)	A53 + zinc plated
25	Triangle stopper (DN100–150)	SUS 304
26	Handle sleeve (DN100–150)	Vinyl plastic

* Materials for KV-L7KF / KV-L7NF fire safe models.

SECTION VIEW

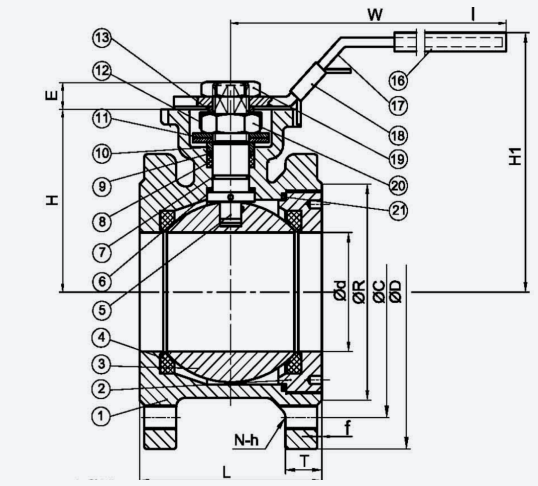

PLAN VIEW · DN15–80

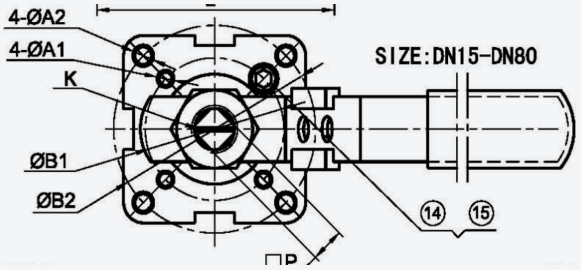

PIPE HANDLE · DN100–150

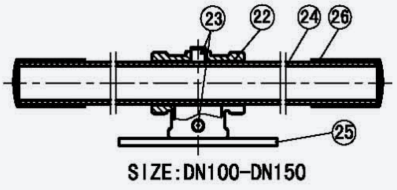

DIN PN10/16/25/40 dimensions.

MM · FIRST VALUE PN10/16, SECOND PN25/40

DN	NPS	Ød	ØR	ØC	ØD	f	T	L	H1	H	E	P	N	h	W	K	ØA1	ØA2	ØB1	ØB2
15	½	15	45	65	95	2	9	42	77	46	9	9	4	M12	145	7/16-20UNF	6	6	36	42
20	¾	20	58	75	105	2	9	44	85	51	9	9	4	M12	145	7/16-20UNF	6	6	36	42
25	1	25	68	85	115	2	9	50	94	62	11	11	4	M12	175	9/16-18UNF	6	7	42	50
32	1¼	32	78	100	140	2	12	60	104	72	11	11	4	M16	175	9/16-18UNF	6	7	42	50
40	1½	38	88	110	150	3	13	65	114	78	14	14	4	M16	196	3/4-16UNF	7	9	50	70
50	2	50	102	125	165	3	20	80	120	88	14	14	4	M16	196	3/4-16UNF	7	9	50	70
65	2½	63.5	122	145	185	3	18 / 22	110 / 113	158	108	17	17	4 / 8	M16	265	7/8-14UNF	9	11	70	102
80	3	76	138	160	200	3	20 / 24	120	165	116	17	17	8	M16	265	7/8-14UNF	9	11	70	102
100	4	95	158 / 162	180 / 190	220 / 235	3	20 / 24	150 / 154	182	139	22	22	8	M16 / M20	400	1-1/8-12UNF	–	11	–	102
125	5	118	188	210 / 220	250 / 270	3	22 / 26	180	224	176	27	27	8	M16 / M24	800	1-3/8-12UNF	–	14	–	125
150	6	142	212 / 218	240 / 250	285 / 300	3	22 / 28	225	268	192	27	27	8	M20 / M24	800	1-3/8-12UNF	–	14	–	125

Data supplied by Kingdom Flow Control and provided for reference only. Dimensions in mm, transcribed from the manufacturer's drawing. Specifications may change without notice – please confirm details with Actuation Valve & Control before ordering.

Need an actuated compact flanged ball valve?

Talk to our UK team about sizes, seat options and complete actuated packages.

actuation.co.uk